Expand DisplayTunnel

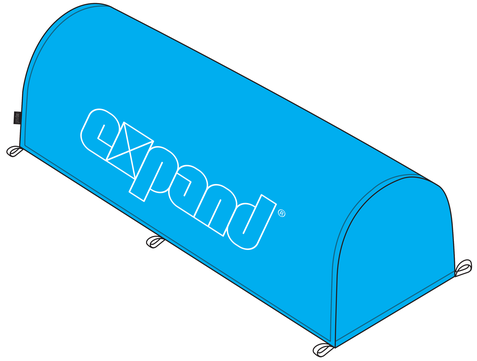
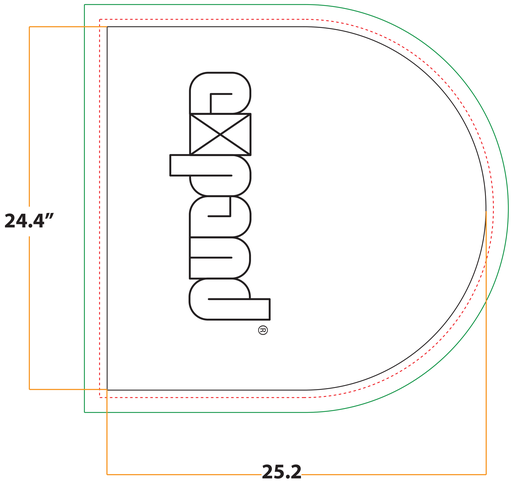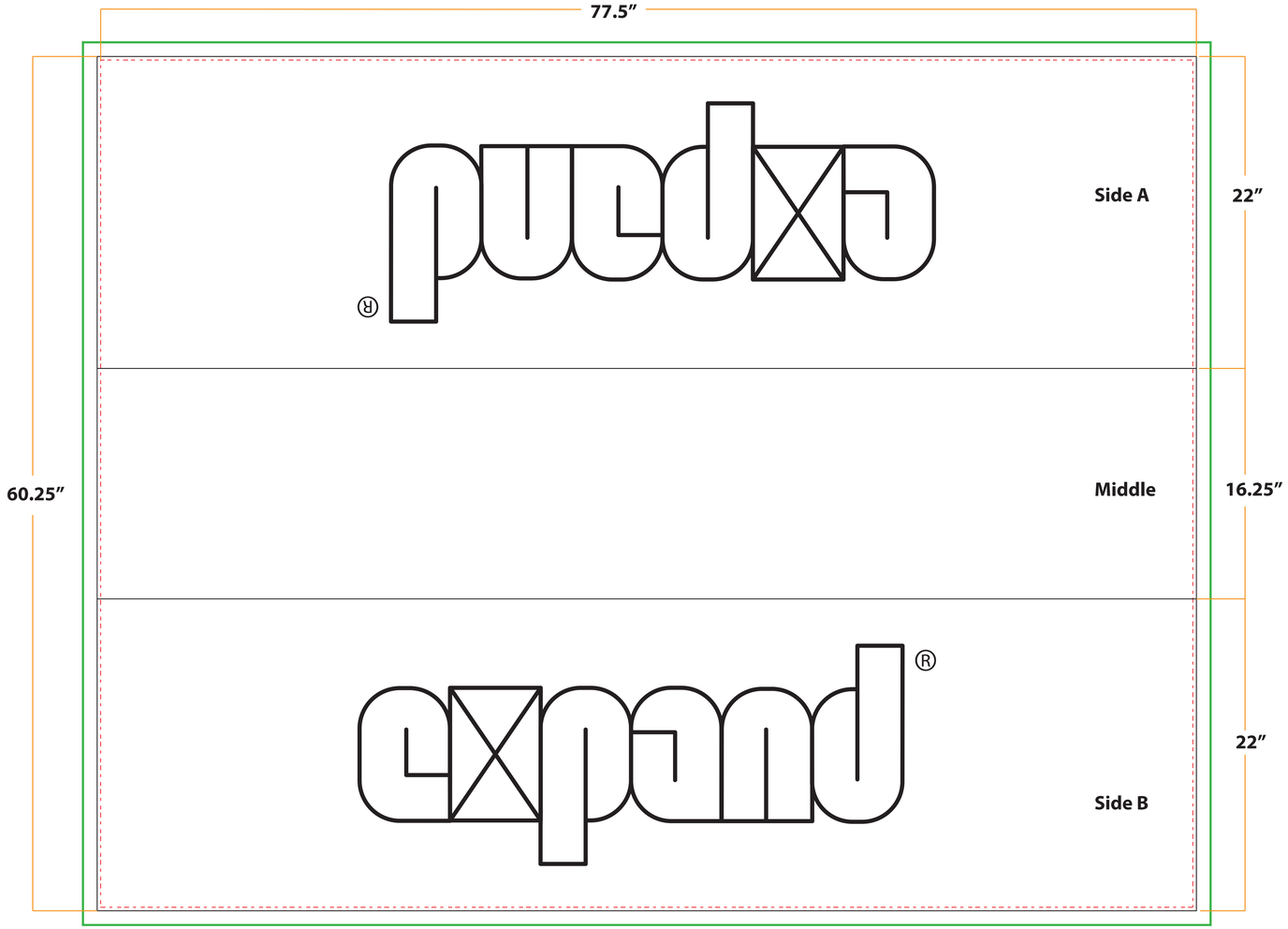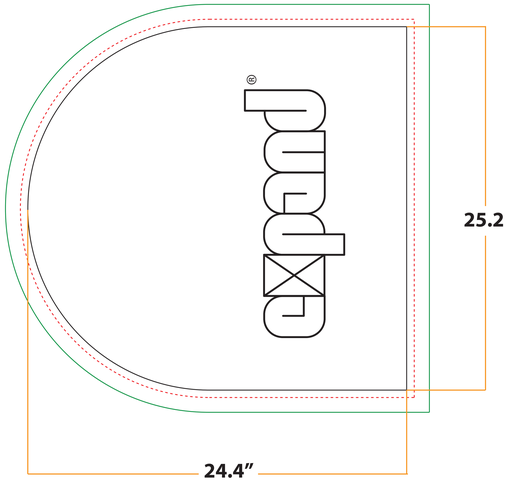
Bring Artwork to the Green Bleed Line